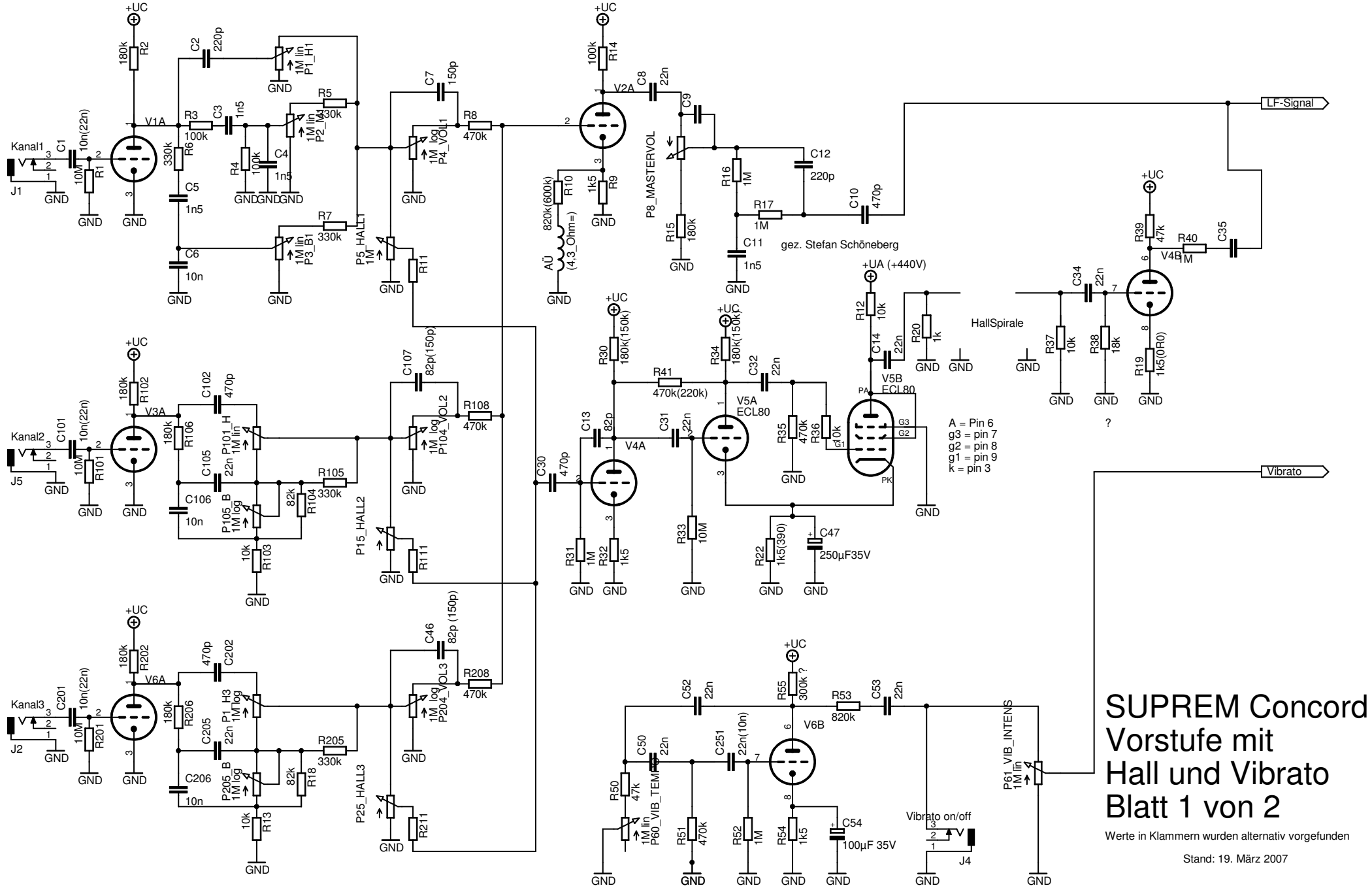

18.03.2007 03:18:34 f=0.89 C:\Programme\EAGLE-4.16r2\projects\Concorde\concord_1.sch (Sheet: 1/1)